147 Central Avenue
Hackensack, New Jersey 07601
Tel: 201-489-8989 • Fax: 201-489-6911

CHICAGO MINIATURE LAMP, INC.
WHERE INNOVATION COMES TO LIGHT

5681F Series T-1 2 High Right Angle Assembly

DESCRIPTION AND FEATURES

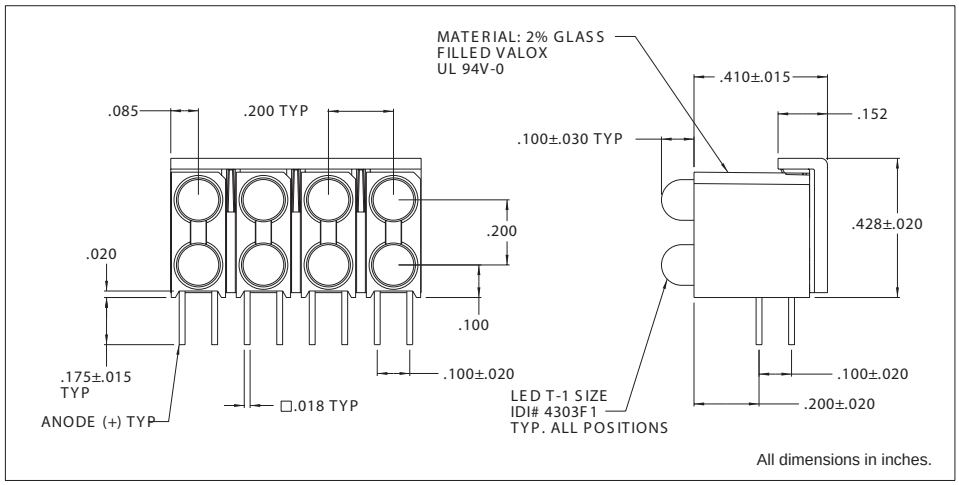

Features:
- 2 T-1 LEDs mounted in single block.
- Less PC board space needed, height and spacing alignment saves assembly cost.
- High Brite and Super Brite LEDs, diffused lens.
- Standoffs prevent flux entrapment.
- Black Nylon plastic block UL94V-O

Alternate LEDs are also available in this package as a standard variation.

ELECTRO-OPTICAL CHARACTERISTICS AND RATINGS

Part Number	Emitted Color	Typical Intensity (mcd)	Rated Current (mA)	Continuous Forward Current Max. (mA)	Forward Voltage		Reverse Breakdown Voltage Min.(V)	Peak Wavelength (nm)
					Typ. (V)	Max. (V)		
5681F1;1	Red/Red	10.0	10	30	2.0	3.0	5.0	650
5681F3;3	Amber/Amber	7	10	30	2.0	3.0	5.0	603
5681F5;5	Green/Green	16	10	30	2.2	3.0	5.0	562
5681F7;7	Yellow/Yellow	6.3	10	30	2.1	3.0	5.0	585

The model numbers listed above are standard off the shelf parts, for the user who may have a requirement calling for various color/electrical specifications, a part number can be determined by referring to the chart shown below.

Model No. is as follows: 5681F _____ ; _____
LED 1 LED 2

LED Color	LED Code	Typical Intensity (mcd)	Rated Current (mA)	Forward Current Max. (mA)	Forward Voltage		Reverse Breakdown Voltage Min. (V)	Peak Wavelength (nm)
					Typ. (V)	Max. (V)		
Red	1LC	2.5	2.0	7	2.2	2.2	5	650
Green	5LC	2.1	2.0	7	1.8	2.2	5	565
Yellow	7LC	1.8	2.0	7	1.9	2.7	5	583
Red	1-5V	8.0	10.0	20	5.0	7.5	5	655
Amber	3-5V	8.0	10.0	15	5.0	7.5	5	583
Green	5-5V	8.0	10.0	15	5.0	7.5	5	565
Red	1	10	10.0	30	2.0	3.0	5	635
Amber	3	7	10.0	30	2.0	3.0	5	603
Green	5	16	10.0	30	2.2	3.0	5	562
Yellow	7	6.3	10.0	30	2.1	3.0	5	583

Chicago Miniature Lamp reserves the right to make specification revisions that enhance the design and/or performance of the product